FISHER & PAYKEL

91CM SERIES 11 INTEGRATED FRENCH DOOR REFRIGERATOR FREEZER ICE & WATER

27039-A RS9121AUVE1

SPARE PART GUIDE

BI

CONTENTS

Introduction	2
Door components	3
Door panel components	7
Shelves & bins area	11
Cabinet interior components	15
Plinth components	19
Terminal, plugs & sockets	25
Single installation components	27
Stability component	29

INTRODUCTION

Voltage

120 –240 50Hz

Kit parts

Where a part number is shown against the descriptions for kit components, they are also available as separate items. In addition, some parts may be supplied with these kits that are not available as separate items, and are therefore either not listed, or a part number is not shown against the part description in this guide.

Part list key

You may see one or more 'keys' in the first column of the part list tables, see below for explanations:

NI	Indicates the part is not illustrated in the diagram.
NOT USED	Indicates the diagram part reference is not used in this manual.
NS	Indicates the part is not servicable.
NM	Not available for this model.

For more information about our products and services, and for detailed contact information, visit our website:

GB https://www.fisherpaykel.com/uk/
IE https://www.fisherpaykel.com/ie/

DOOR COMPONENTS

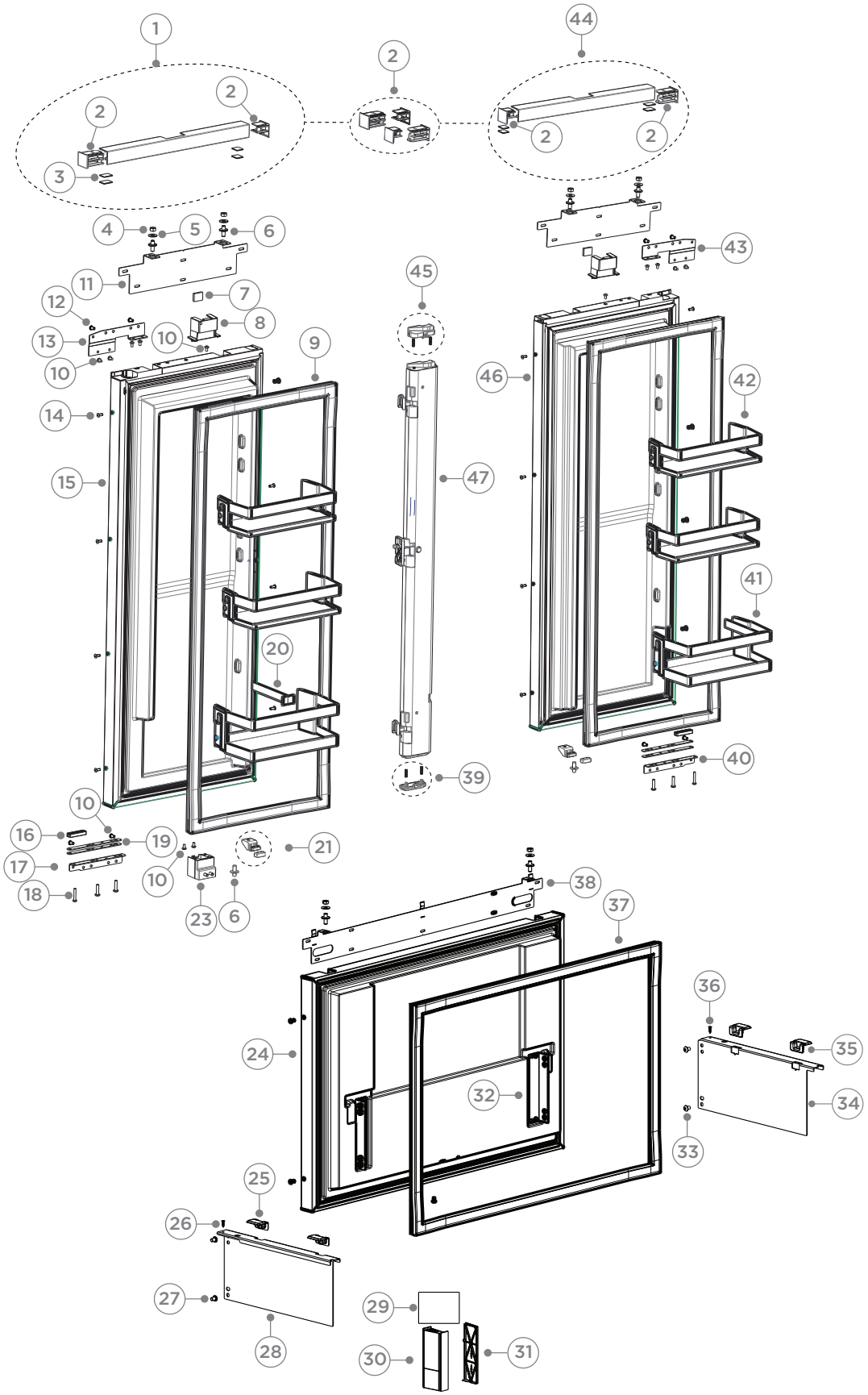

DWG 007499

DOOR COMPONENTS

PART	PART NUMBER	PART DESCRIPTION
1	886718P	COVER DOOR TOP RS36FDR ASSY
	INCLUDES	EXTRUSION DOOR TOP RS18
	INCLUDES	CAP EXT DOOR X 2
	INCLUDES 846179P	STRIP 6 DUAL LOCK TABS PKT 4
2	887326P	CAP GENERIC EXT DOOR
	INCLUDES	CAP EXTRUSION DOOR X 2
	INCLUDES	CAP EXT TOP RSV LH
	INCLUDES	CAP EXT TOP RSV RH
3	846179P	STRIP 6 DUAL LOCK TABS PKT 4
4	838158P	NUT M8 HEX MS ZP PKT10
5	842456P	WASHER M8X21X1.6 ZP PKT10
6	838153P	BOLT SKIN DOOR BI PKT10
7	851724	MAGNET DOOR
8	844632	BRACKET DOOR MAGNET
9	886629P	GASKET DOOR RS3684A
10	841568P	SCREW MC M5X10 PAN PH MS ZP PKT10
11	867829	BRACKET PANEL DOOR RS18 PC
12	847953P	SCREW MC M6X10 BTN HEX ZP PKT1
13	851092	BRACKET ADAPT COL K05 RH PC
14	845432P	SCREW M5X12MUSH PH MT ST PKT10
15	863297P	DOOR FOAMED RS3684A RH ASSY
16	843226	SPACER HINGE BRACKET K05
17	851090	BRACKET ADAPT K05 BTM RH PC
18	846155P	SCREW MC M5X30 PAN PH MS ZP PK
19	851095	BRACKET ADAPT SPACER BTM PC
20	869438P	DIVIDER SHELF DOOR GALLON
21	887084P	DOOR STOP RS36A ASSY
	INCLUDES	BODY DOOR STOP RS36A
	INCLUDES	SLEEVE DOOR STOP RS36A
23	886646P	PLUNGER ASSY RS36A
24	863294P	DRAWER RS36W FOAMED ASSY
	INCLUDES 862229	BRACKET DRAWER ADJUST
25	862694	GROMMET BRACKET FC RSW
26	611933P	SCREW ST 8X5/8TA MTS PH H5ZNPL
27	864282P	SCREW MC M8X12 BTN HEX PKT10

DOOR COMPONENTS

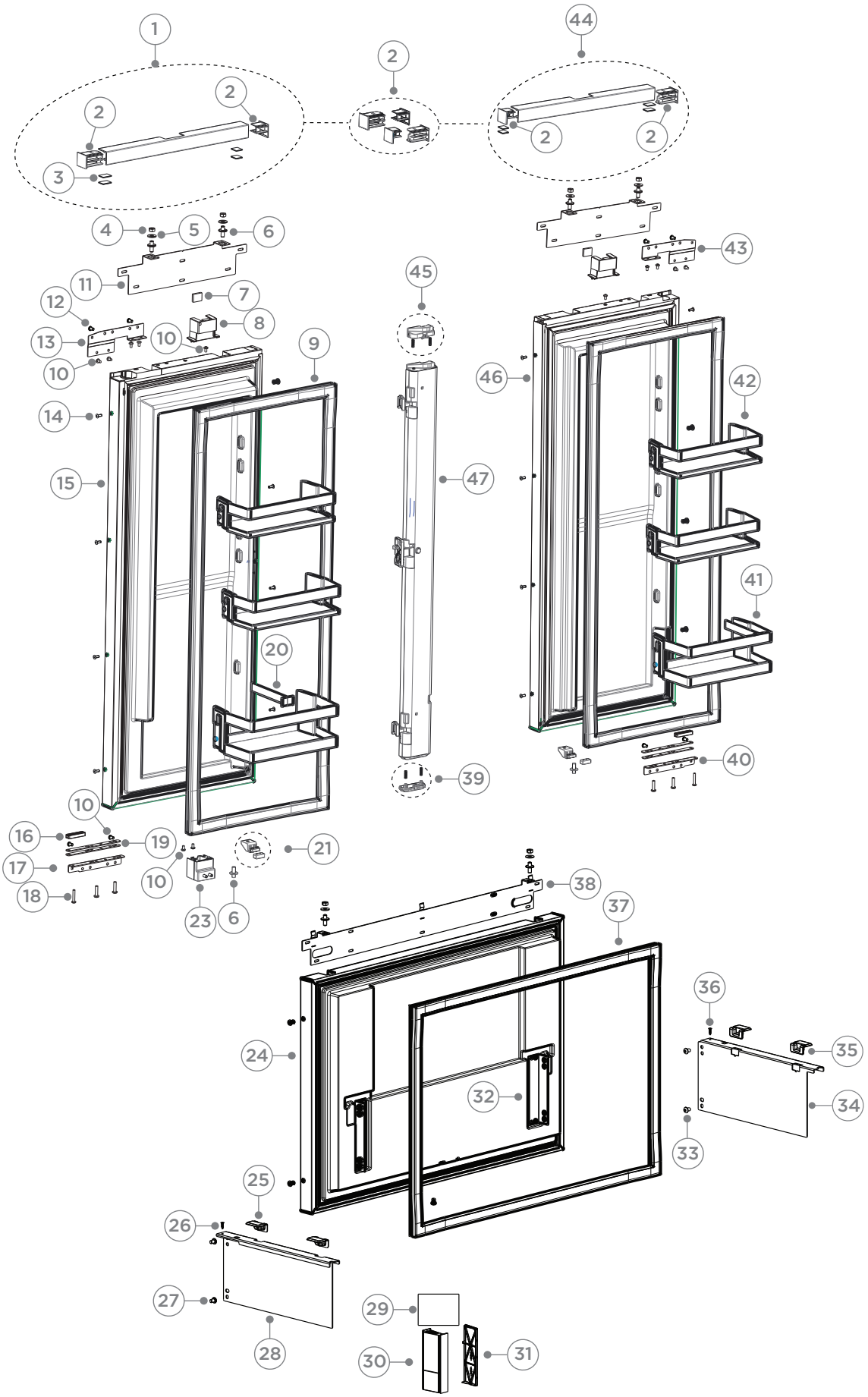

DWG 007499

DOOR COMPONENTS

PART	PART NUMBER	PART DESCRIPTION
28	862183	BRACKET DRWR SLIDE RSW RH
29	848730	DUAL LOCK VELCRO TAB 1"X6"
30	848759	DIVIDER MOUNT ASSEMBLY
31	847957	CAP FLOW DIVIDER
32	862229	BRACKET DRAWER ADJUST
33	864282P	SCREW MC M8X12 BTN HEX PKT10
34	862184	BRACKET DRWR SLIDE RSW LH
35	862694	GROMMET BRACKET FC RSW
36	611933P	SCREW ST 8X5/8TA MTS PH H5ZNPL
37	868775P	GASKET DRAWER RS36W
38	869078	BRKT DRAWER PANEL RS36 ASSY PC
39	886599P	SEAL FLAPPER BOT RS3684A
	INCLUDES	SEAL FLAPPER BOT RS3684A
	INCLUDES	SPRING COMP SEAL BI
40	851091	BRACKET ADAPT K05 BTM LH PC
41	886615P	SHELF DR GALLON ASSY RS36A K
42	886614P	SHELF DOOR MID RS36A K ASSY
43	851084	BRACKET ADAPT COL K05 LH PC
44	886719P	COVER DOOR TOP RS36FDL ASSY
	INCLUDES	EXTRUSION DOOR TOP RS18
	INCLUDES	CAP EXT DOOR X 2
	INCLUDES 846179P	STRIP 6 DUAL LOCK TABS PKT 4
45	886681P	SEAL FOLLOWER FLAPPER RS3684A
	INCLUDES	SEAL FOLLOWER FLAPPER RS3684A
	INCLUDES	SPRING COMP SEAL BI
46	863298P	DOOR RS36A FOAMED LH ASSY
47	886564P	FLAPPER ASSY RS3684A
	INCLUDES 886681P	SEAL FOLLOWER FLAPPER RS3684A
	INCLUDES 886599P	SEAL FLAPPER BOT RS3684A

DOOR PANEL COMPONENTS

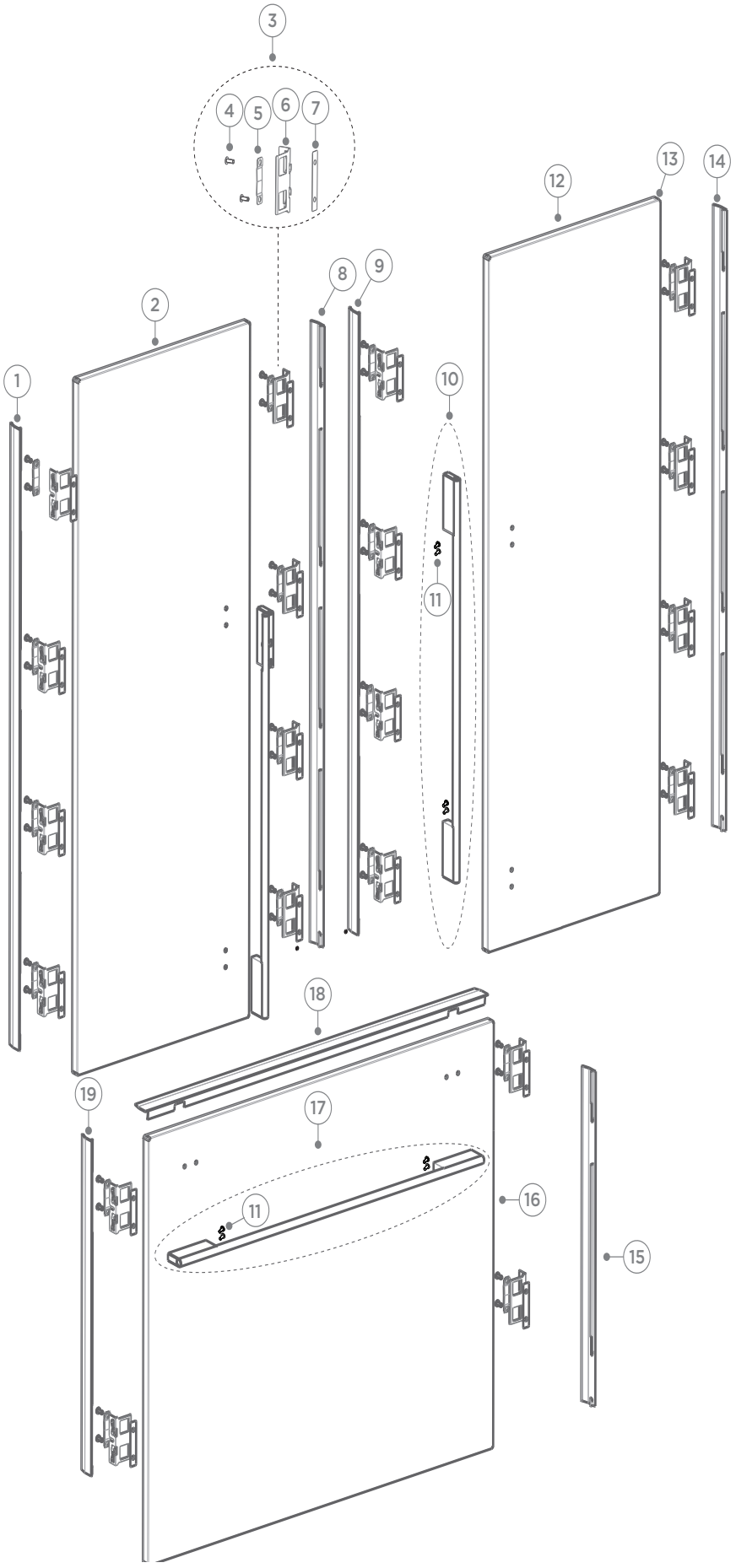

DWG 007505

DOOR PANEL COMPONENTS

PART	PART NUMBER	PART DESCRIPTION
1	867405P	TRIM SIDE DOOR UPR RS36 LHS
2	886610P	PANEL DOOR ASSY 36FDL
3	867900P	KIT BRACKET PANEL ATTACH V2
	INCLUDES	840371P SCREW 8GX16 MUSH WASHER HD
	INCLUDES	867267 SLIDER BRACKET SKIN DR 60CM
	INCLUDES	864933 BRACKET TRIM SIDE DOOR 60CM
	INCLUDES	867266 SPACER BRACKET SIDE DR 60CM
4	840371P	SCREW 8GX16 MUSH WASHER HD
5	867267	SLIDER BRACKET SKIN DR 60CM
6	864933	BRACKET TRIM SIDE DOOR 60CM
7	867266	SPACER BRACKET SIDE DR 60CM
8	867515P	TRIM SIDE DOOR UPR RS36 RHS
9	867405P	TRIM SIDE DOOR UPR RS36 LHS
10	862345P	HANDLE RD3 727 ASSY
	INCLUDES 842292P	SCREW WSH M5X25 KIT
10	863012P	ASSY HANDLE D5 727 (SILVER)
	INCLUDES 842292P	SCREW WSH M5X25 KIT
	INCLUDES	ENDCAP
10	863644P	ASSY HANDLE D5 727 (BLACK)
	INCLUDES 842292P	SCREW WSH M5X25 KIT
	INCLUDES	ENDCAP
10	863509P	HANDLE ASSY PRO PC
	INCLUDES 842292P	SCREW WSH M5X25 KIT
	INCLUDES	ENDCAP
10	867805P	HANDLE ASSY CLASSIC 647
	INCLUDES 842292P	SCREW WSH M5X25 KIT
	INCLUDES	ENDCAP
10	256148P	HANDLE ASSY PRO PC BR
	INCLUDES 842292P	SCREW WSH M5X25 KIT
10	256177P	HANDLE ASSY PRO PC DC
	INCLUDES 842292P	SCREW WSH M5X25 KIT
	INCLUDES	ENDCAP
11	842292P	SCREW WSH M5X25 KIT
12	886636P	PANEL DOOR ASSY 36FDR

DOOR PANEL COMPONENTS

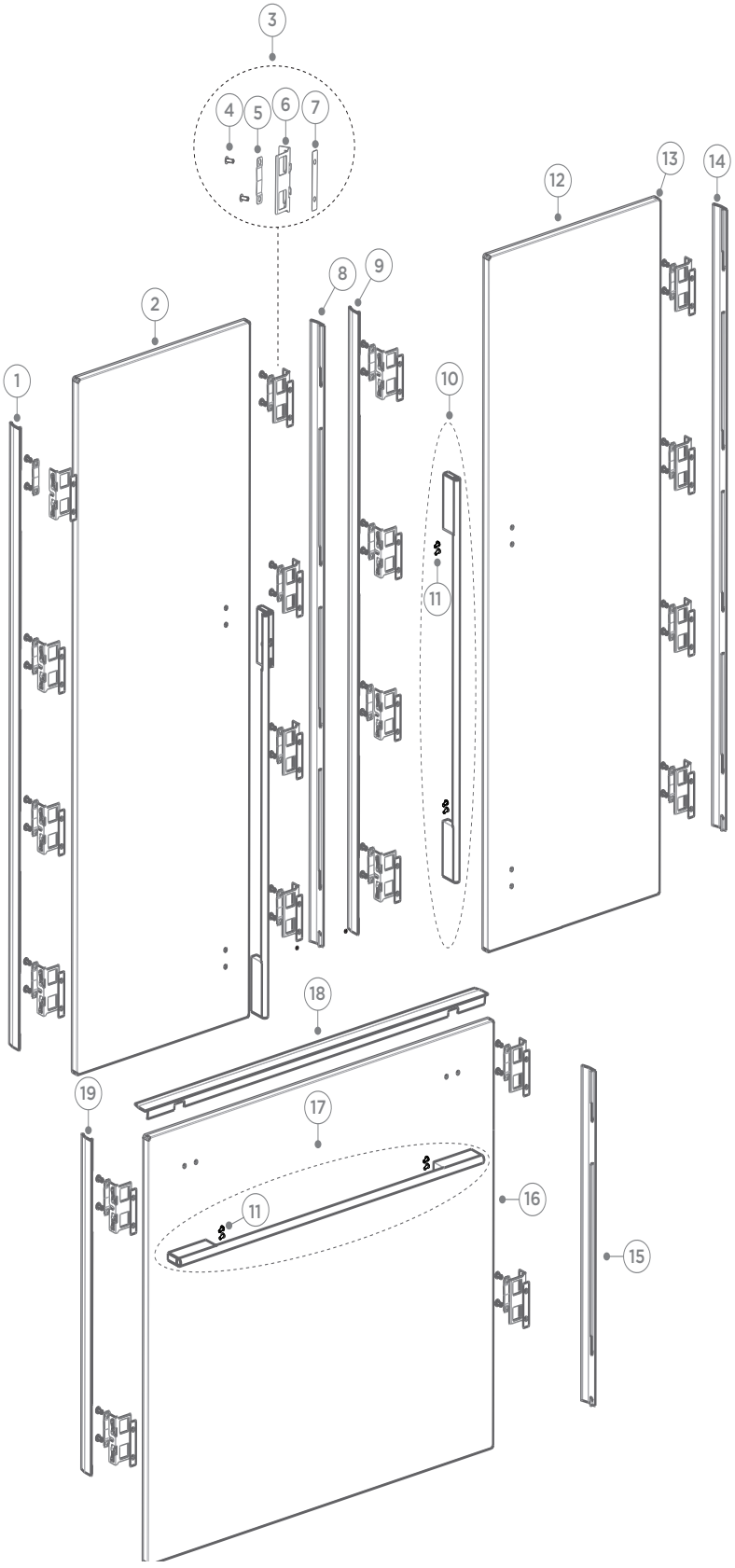

DWG 007505

DOOR PANEL COMPONENTS

PART	PART NUMBER	PART DESCRIPTION
13	527679P	KIT CORNER FLAT DOOR PKT4
14	867515P	TRIM SIDE DOOR UPR RS36 RHS
15	867516P	TRIM SIDE DOOR LWR RS36 RHS
16	868483P	PANEL DRAWER RS36W ASSY
17	869904P	HANDLE RD3 ASSY 798 HORIZ
	INCLUDES 842292P	SCREW WSH M5X25 KIT
17	869901P	ASSY HANDLE D5 798 (SILVER)
	INCLUDES 842292P	SCREW WSH M5X25 KIT
	INCLUDES	ENDCAP
17	885141P	HANDLE D5 ASST 798 (BLACK)
	INCLUDES 842292P	SCREW WSH M5X25 KIT
	INCLUDES	ENDCAP
17	869903P	HANDLE ASSY PRO RS 36W 748
	INCLUDES 842292P	SCREW WSH M5X25 KIT
	INCLUDES	ENDCAP
17	885797P	HANDLE ASSY PRO RS 36W 748 BR
	INCLUDES 842292P	SCREW WSH M5X25 KIT
	INCLUDES	ENDCAP
17	885798P	HANDLE ASSY PRO RS 36W 748 DC
	INCLUDES 842292P	SCREW WSH M5X25 KIT
	INCLUDES	ENDCAP
17	869902P	ASSY HANDLE CLASSIC 719
	INCLUDES 842292P	SCREW WSH M5X25 KIT
	INCLUDES	ENDCAP
18	869735P	TRIM DRAWER TOP RS 36
19	867406P	TRIM SIDE DOOR LWR RS36 LHS

SHELVES & BINS AREA

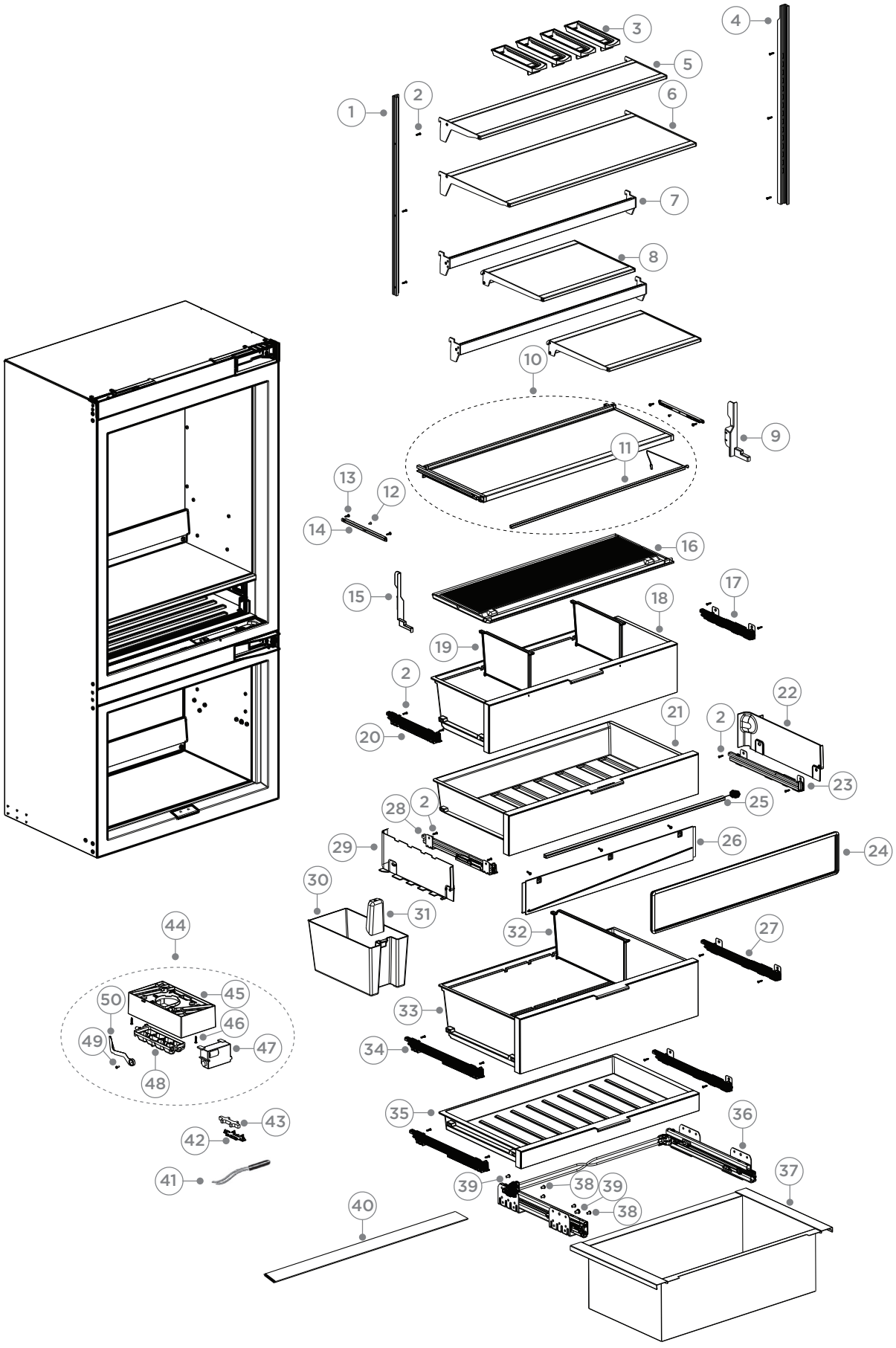

DWG 006940

SHELVES & BINS AREA

PART	PART NUMBER	PART DESCRIPTION
1	869083	RAIL CANTI LH 36
2	847036P	SCREW TORX CSK SS 8X16 PKT10
3	847441	RACK BOTTLE SINGLE CANTI
4	869084	RAIL CANTI RH 36
5	863302P	SHELF CANTI HALF ASSY RS36
6	863306P	SHELF CANTI 36S ASSY
7	869368P	RAIL ACCESSORIES
8	868587P	SHELF SPLIT 36 ASSY
9	869432	COVER CONNECTION L CRSP SHELF
10	869577P	SHELF ASSY CRSP UPR RS36
	INCLUDES 869798P	SHELF LIGHT ASSY RS36
11	869798P	SHELF LIGHT ASSY RS36
12	556654P	SCREW ST 8X3/8 TAB MTS PH PK10
13	847532P	SCREW M4X16 PLASTITE PH T15 PK
14	869430	BRACKET SHELF CRSP RS36
15	869431	COVER CONNECTION R CRSP SHELF
16	869573P	HCL CRSP RS36
17	851575	SLIDE FE20 247 SC RH - BEFORE SN RAV847878
	887106P	SLIDE FE20 247 RH ZN SC - FROM SN RAV847878
18	863335P	BIN ASSY UPR RS36W
19	844810	DIVIDER BIN UPR
20	851574	SLIDE FE20 247 SC LH - BEFORE SN RAV847878
	887105P	SLIDE FE20 247 LH ZN SC - FROM SN RAV847878
21	868842P	BIN VTB ASSY RS36
22	869487P	COVER DUCT VTB RH
23	844646	SLIDE 337R SC - BEFORE SN RAV847878
	887104P	SLIDE FE20 350 RH ZN SC - FROM SN RAV847878
24	868840P	GASKET BIN VTB RS36
25	869442P	VTB LIGHT ASSY RS36
26	885903P	COVER DUCT REAR VTB ASSY
	INCLUDES	COMPARTMENT HEATER VTB RS36
27	863671	SLIDE FE20 370R SL - BEFORE SN RAV847878
	887108P	SLIDE FE20 370 RH ZN SL - FROM SN RAV847878
28	844645	SLIDE 337L SC - BEFORE SN RAV847878
	887103P	SLIDE FE20 350 LH ZN SC - FROM SN RAV847878

SHELVES & BINS AREA

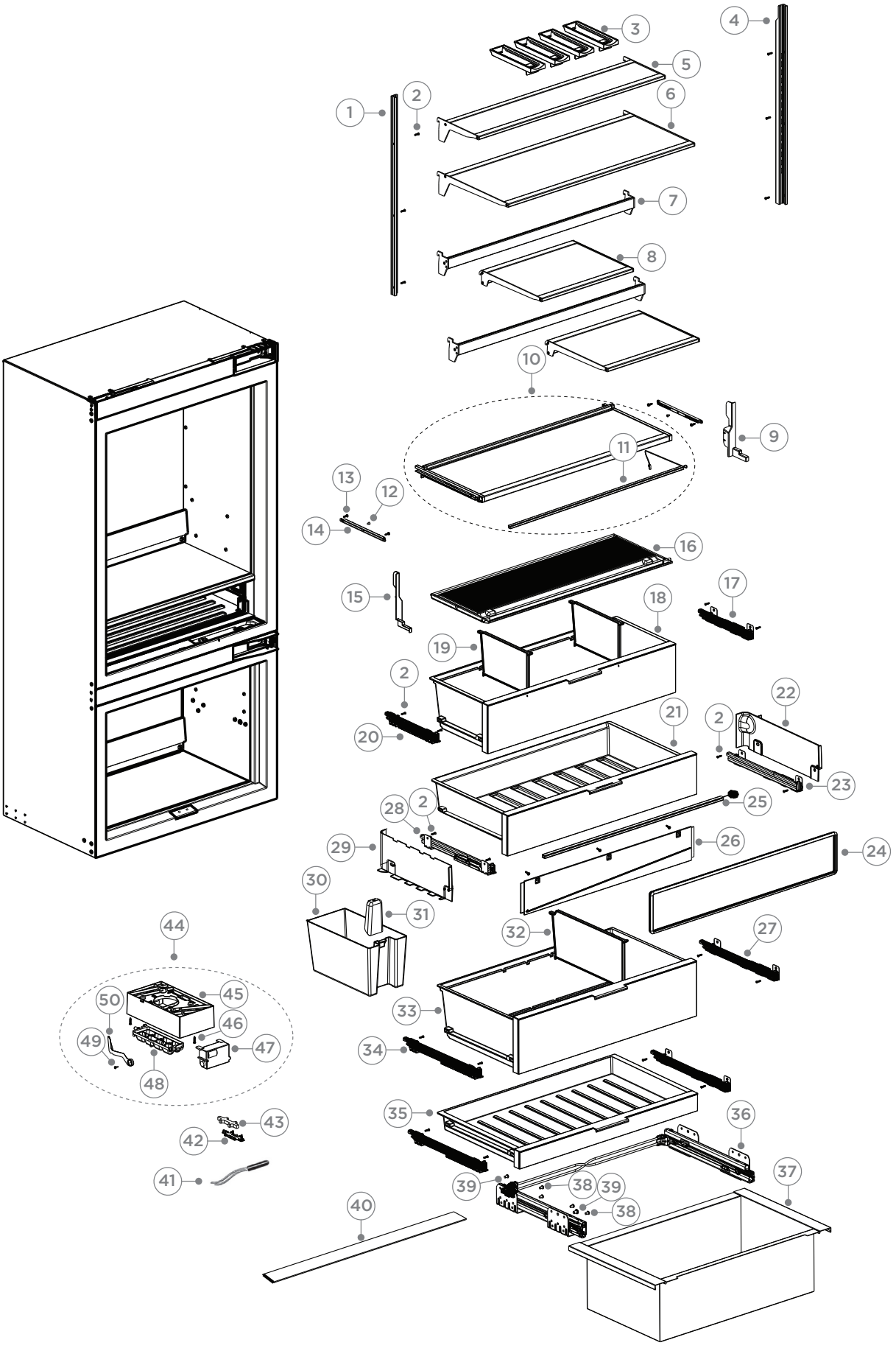

DWG 006940

SHELVES & BINS AREA

PART	PART NUMBER	PART DESCRIPTION
29	869413P	COVER DUCT VTB LH
30	851070P	BIN ICE CONTAINER RSW
31	836929	SCOOP ICE
32	844809	DIVIDER BIN LWR
33	863326P	BIN ASSY LWR 36
34	863670	SLIDE FE20 370L SL - BEFORE SN RAV847878
	887107P	SLIDE FE20 370 LH ZN SL - FROM SN RAV847878
35	863369P	TRAY ASSY 36
36	863344P	ANTIRACK SLIDE DRWR RS36W
37	868789P	BIN DRAWER RS36W P ASSY
38	847953P	SCREW MC M6X10 BTN HEX ZP PKT1
39	864282P	SCREW MC M8X12 BTN HEX SOC ZP
40	886945P	MOD DISP V2 RS36 SVC
41	321107	ICEMAKER SENSOR LEAD WIRE KIT
42	837180	CLIP SENSOR ICE TRAY
43	836909	FOAM CLIP SENSOR
44	864297P	ICEMAKER HOUSING DUCT ASSY KIT
	INCLUDES 820841	TRAY ICE AUTO LARGE
	INCLUDES 836934	GEARBOX ICE MAKER
	INCLUDES 868478	LEVER ARM ICE MAKER
	INCLUDES 836948P	SCREW 6X1/2 SS PAN PH PKT10
	INCLUDES 817825P	SCREW #8X22 WAFER PH ST TV PKT10
	INCLUDES 864293	HOUSING ICEMAKER DUCT
45	864293P	HOUSING ICEMAKER DUCT
46	817825P	SCREW #8X22 WAFER PH ST TV PKT10
47	836934	GEARBOX ICE MAKER
48	820841	TRAY ICE AUTO LARGE
49	836948P	SCREW 6X1/2 SS PAN PH PKT10
50	868478P	LEVER ARM ICE MAKER

CABINET INTERIOR COMPONENTS

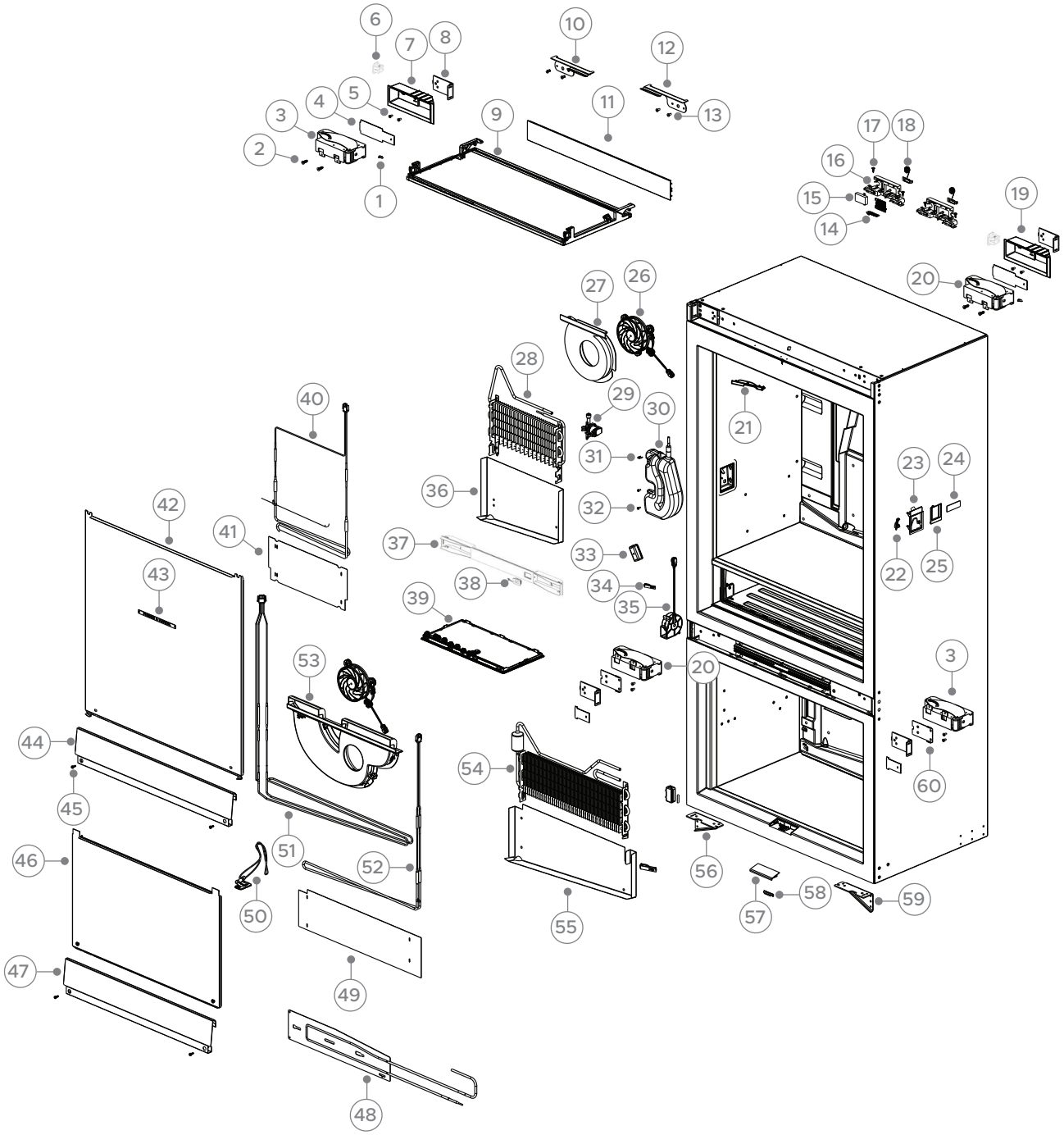

DWG 007507

CABINET INTERIOR COMPONENTS

PART	PART NUMBER	PART DESCRIPTION
1	841213P	EARTH WASHER ASBI PKT10
2	839692P	SCREW M6X16CSK DIN965 PH MS ZP PKT10
3	839474	HINGE K05-B 115GRAD M6 “S”
4	843720	COVER POCKET HINGE TOP
5	845428P	SCREW M5X12 CSK PH NP PKT10
6	886680P	PLUG HINGE POCKET SPARE
7	843719	POCKET HINGE TOP LH
8	842944	BRACKET HINGE TOP RS
9	885793P	LIGHT CEILING PANEL RS36 ASSY
10	851099	BRACKET ALCOVE TOP LH PC
11	886605P	TRIM TOP EXTRUSION RS36 FD
12	851098	BRACKET ALCOVE TOP RH PC
13	845432P	SCREW M5X12 MUSH PH MT STL ZN PKT10
14	851381P	MOD HUMIDITY SENSOR W SVC
15	564619P	MOD COMBI WIFIBT GEA
16	843872	HOUSING SENSOR
17	840371P	SCREW 8GX16 MUSH WASHER HD PKT10
18	851352P	MOD HALL SWITCH RS SVC
19	843718	POCKET HINGE TOP RH
20	837842	HINGE K05-A 115GRAD M6 “S”
21	886550P	TRACK FLAPPER RS36A
22	862169	SWITCH MICRO R600A HONEYWELL
23	862562	SPOUT DISPENSER GREY
24	863274	FASCIA DISPENSER B-MOD
25	862563	PADDLE DISPENSER GREY
26	844545P	FAN CNTFGL D125 ASSY
27	844551	HOUSING FAN CNTFGL D125 ASSY
28	866809P	EVAP PC B UPR 5 PASS 290MM
29	866531	VALVE WATER DISP DIRECT 2QC 7W
30	868053	WATER TANK VALVE ASSY
31	847700	CLIP LOCKING I&W
32	836948P	SCREW M6X1/2 PAN SS PKT 10
33	821745	COVER PLUG TYCO
34	845878	CLIP SENSOR
35	869082P	FAN SUNON 75MM

CABINET INTERIOR COMPONENTS

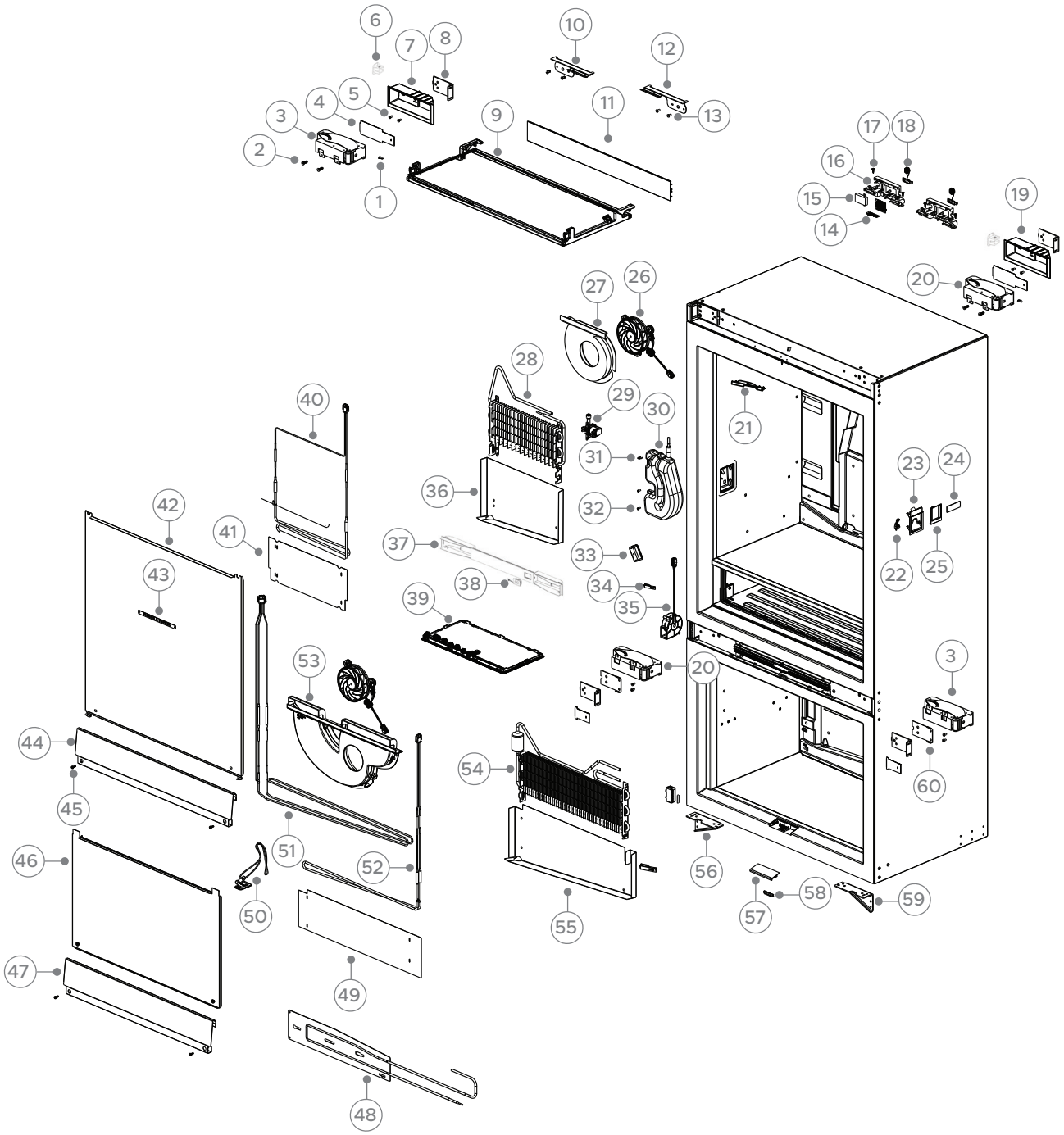

DWG 007507

CABINET INTERIOR COMPONENTS

PART	PART NUMBER	PART DESCRIPTION
36	844876	SHIELD DRAIN UPR 30PC
37	886173P	COVER XRAIL MID RS36A
38	886642P	CONTACT ASSY RS36A
39	863960P	CEILING LIGHT ASSEMBLY
40	868917P	HEATER DEF 2PV 36 230V
41	844108	SHIELD HEAT 30 LWR FC
42	863749P	KIT DUCT COVER UPR RS36 ASSY
	INCLUDES	COVER DUCT UPR RS36W SS ASSY
	INCLUDES 847363	NAMEPLATE FP CHROME LETTERS
43	847363	NAMEPLATE FP CHROME LETTERS
44	863744	COVER DRAIN UPR RS36 BRUSHD SS
45	847532P	SCREW M4X16 PLASTITE PH T15 PK
46	868758P	KIT DUCT COVER LWR RS36 ASSY
47	863746	COVER DRAIN LWR RS36 BRUSHD SS
48	886167P	COOLING PLATE KIT RS36W
49	869051	SHIELD HEAT 36 FC
50	885370P	TUBE SPOUT HEATER IM ASSY
51	869077P	VTB DEFROST HEATER KIT
52	868917P	HEATER DEF 2PV 36 230V
53	869120	HSNG FAN CNTFGL RS36 LC ASSY
54	868888P	EVAP ASSY LWR FZ
55	869052	SHIELD DRAIN LWR 36IN
56	842883	BRACKET PLINTH FRONT LEFT
57	851726	COVER SENSOR DRAWER
58	851331P	MOD HALL SWITCH ASBI SVC
59	842882	BRACKET PLINTH FRONT RIGHT
60	847537	SPACER BRACKET HINGE TOP

PLINTH COMPONENTS

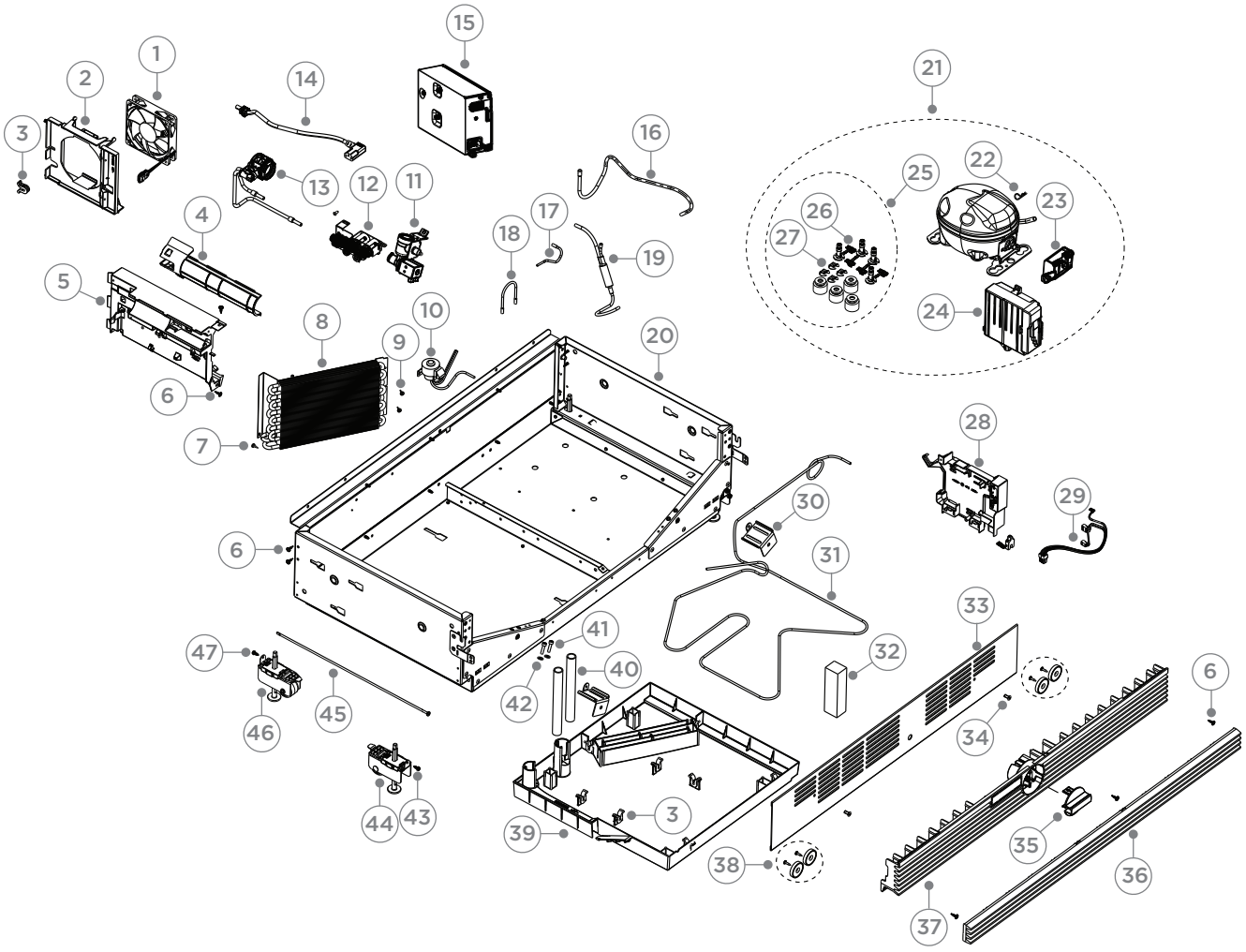

DWG 006922

PLINTH COMPONENTS

PART	PART NUMBER	PART DESCRIPTION
1	838855P	FAN CONDENSER 120X25
2	843139	DIVIDER PLINTH REAR
3	W10137529	GROMMET-CONDENSER
4	869486	COVER FILTER FRONT
5	885539	DIVIDER FRONT I&W ASSY US
NI	839770	TAPE FOAM 9X9X550
NI	842430	TAPE FOAM 9X9X315 SOFTCELL
6	840371P	SCREW 8GX16 MUSH WASH (PKT10)
7	611977P	SCREW ST 8X1/2 SD TRS NIB PH P
8	843131P	CONDENSER FOT 260 X 177 2 PASS
9	546692P	SCREW ST 8X12MM TAB MTS PKT10
10	869969P	REF VALVE TO FILTER ASSY RS36
	INCLUDES 845758P	FILTER DRYER DUAL 5G
11	885117P	VALVE INLET WTR REF GND 230V
12	885119P	VALVE DUAL I&W REF GND 230V
13	869601	FILTER HEAD WATER RS36
14	885378P	CORDSET PWR UK SG COLUMNS
15	868831P	ASSY CTRL RS36
	INCLUDES	ASSY CTRL RSW RX
16	842989	TUBE ADAPTOR SUCTION RS
17	842972	TUBE ADAPTOR PROCESS RS
18	845861	TUBE COPPER U-BEND
19	845758P	FILTER DRYER DUAL 5G
20	863119	LOCKING PLATE REAR PLINTH 36
21	207496P	KIT COMPR VESI9C FA COL 230V
	INCLUDES 207393	INVERTER EMB VESF9C 115V FA
	INCLUDES 207310	COVER PROTECTOR VEM
	INCLUDES	CLIP R COVER COMP M1.6 S4HPP16
	INCLUDES 845757P	GROMMET COMPR MTG 26MM KIT
	INCLUDES 845758P	FILTER DRYER DUAL 5G
22	207419	CLIP R COVER COMP M1.6 S4HPP16
23	207310	COVER PROTECTOR VEM
24	207393	INVERTER EMB VESF9C 115V FA

PLINTH COMPONENTS

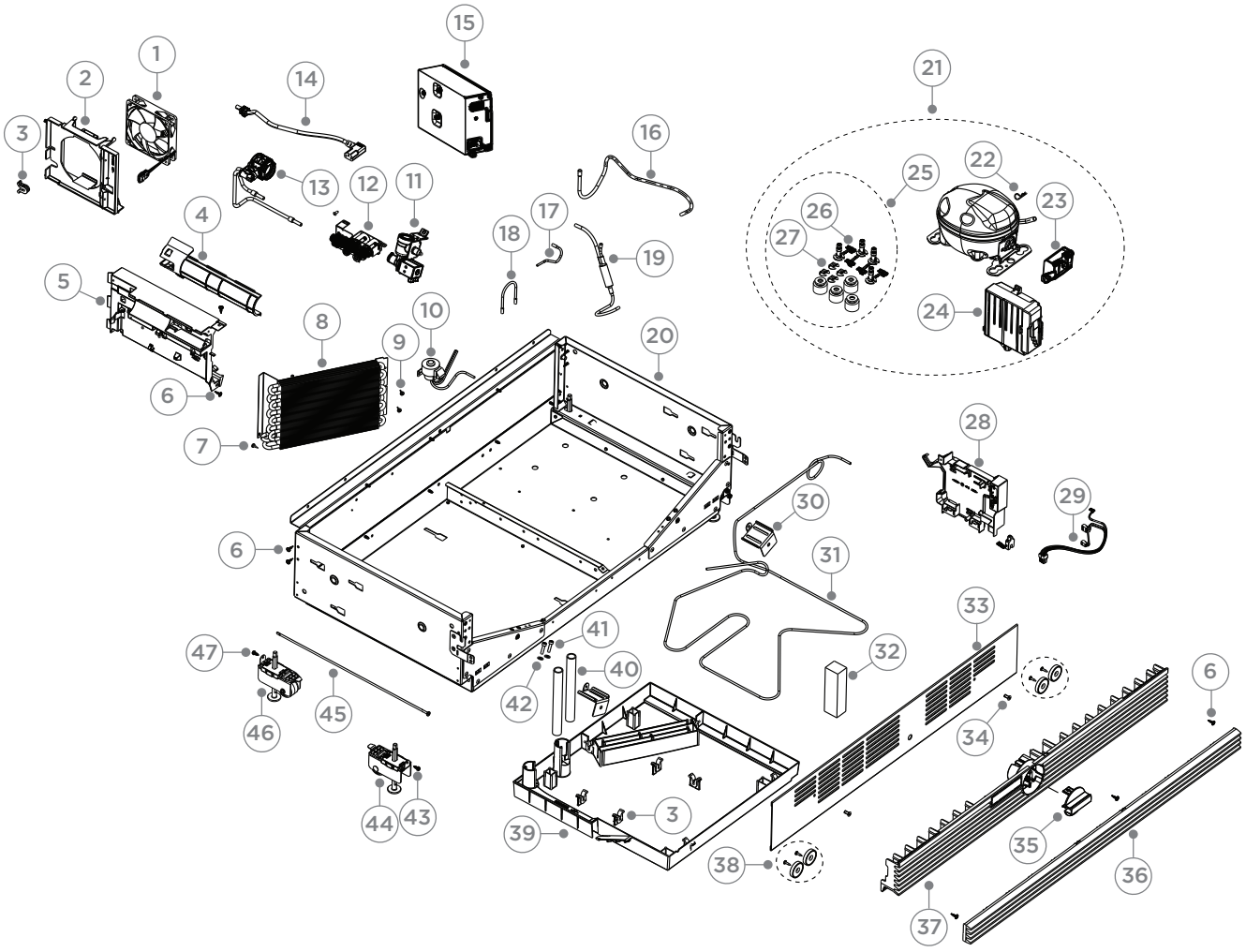

DWG 006922

PLINTH COMPONENTS

PART	PART NUMBER	PART DESCRIPTION
25	843824P	GROMMET 26MM KIT
	INCLUDES 841291	POST COMP MTG 26MM PKT X4
	INCUDES	GROMMET 26MM X4
	INCLUDES 855270	CLIP FOOT COMPRESSOR X 4
26	841291P	POST COMP MTG 26MM PKT X4
27	855270P	CLIP FOOT COMPRESSOR (PKT 4)
28	849714	BRACKET INVERTER MOLEX CONN
29	842765	HARNESS INVERTER EMB RS
30	842018	BRACKET KICK STRIP ADJUSTING
31	842988	TUBE DISCHARGE RS3084
32	846405	BLOCKER AIR BYPASS KICKSTRIP
33	885375	MOUNTING PLATE KICK STRIP 36P
34	845432P	SCREW M5X12MUSH PH MT ST PKT10
35	864068	FILTER REMOVAL TOOL ASSY
36	868875P	GRILLE MOVING ASSY RS36
	INCLUDES	MAGNET GRILLE LONG
	INCLUDES	TAPE DBL SIDE PE BLK T 1823
37	868846	GRILLE FIXED RS36W
38	866753	KIT TOEKICK MAGNET (4 SETS)
	INCLUDES	MAGNET TOEKICK 36X7MM
	INCLUDES	SCREW WS 8X5/8 TWINFST
39	868808	TRAY EVAP RS36
40	845859	DRAIN PLINTH
41	847984P	SCREW CAP M5X20 NZ PKT10
42	843453P	WASHER FLAT M6X12X1.2 PKT10
43	849237P	SCREW AB #8X13 HEX PH PKT10
44	869085P	KIT LEVELLING SYSTEM FNT LONG - POST 20 APR 2023
45	843475	ROD BK LEVELLING
46	869086P	KIT LEVELLING SYSTEM REAR LONG - POST 20 APR 2023
47	849237P	SCREW AB #8X13 HEX PH PKT10

PLINTH COMPONENTS

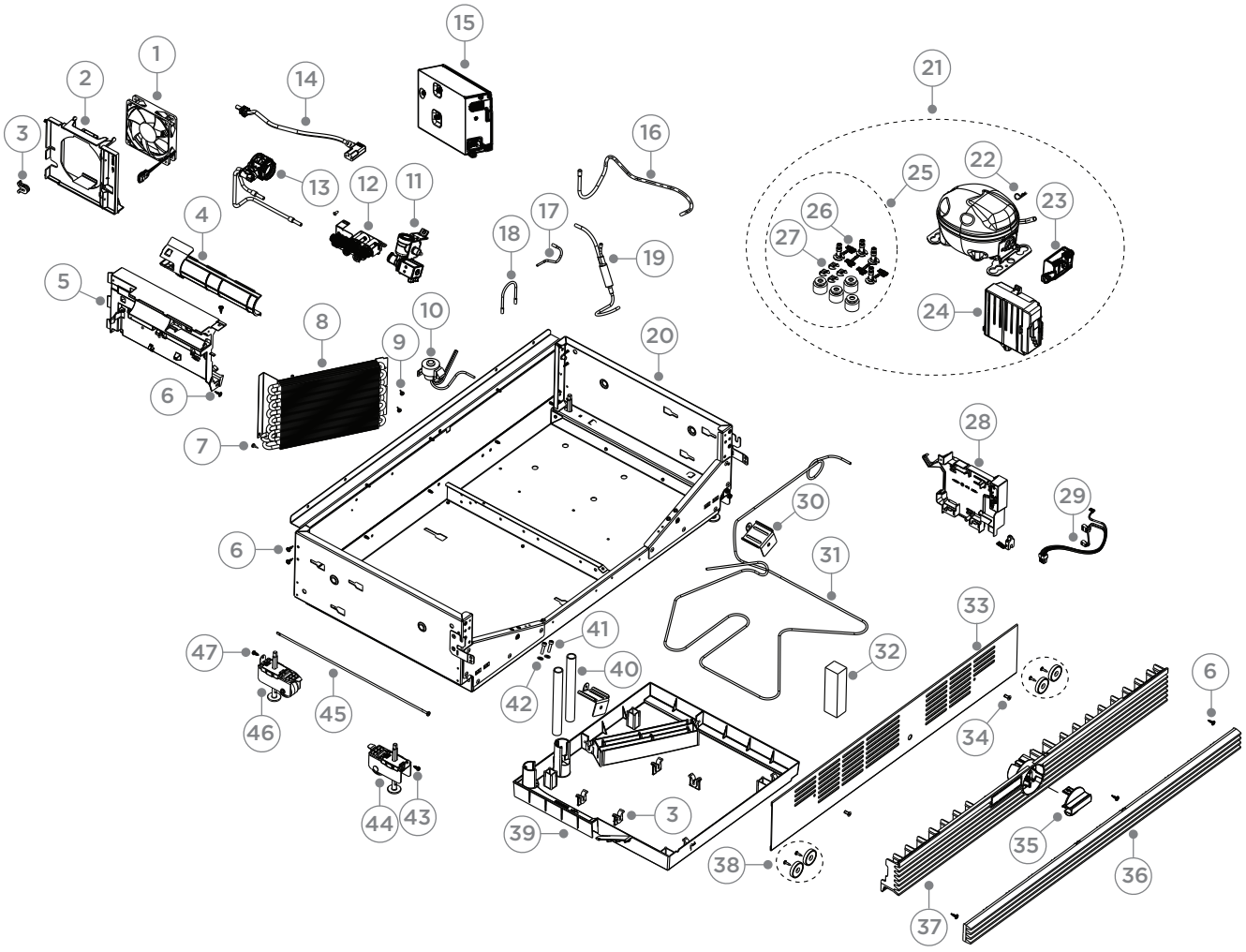

DWG 006922

PLINTH COMPONENTS

PART	PART NUMBER	PART DESCRIPTION
NI	868321	KIT INSTALL FILTER WATER ROW
	INCLUDES 841679	ADAPTOR 1/4”STEM X7/16”-24 UNS
	INCLUDES 847029	FILTER WATER
	INCLUDES 847185	HOSE BRAIDED 7/16 UNS 1/2 BSP
	INCLUDES 847700	CLIP LOCKING I&W
NI	841679	ADAPTOR 1/4”STEM X7/16”-24 UNS
NI	847200	FILTER WATER REF FWC3
NI	847185	HOSE BRAIDED 7/16 UNS 1/2 BSP
NI	847700	CLIP LOCKING I&W

1 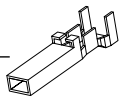 JST SOCKET TERMINAL

2 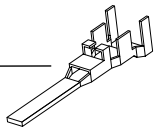 JST PIN TERMINAL

3 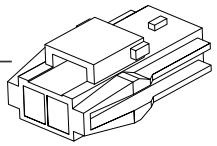 JST SOCKET

4 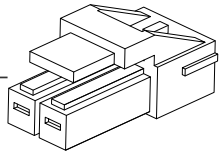 JST PLUG

5 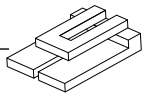 JST RETAINER

DWG 004922

TERMINAL, PLUGS & SOCKETS

PART	PART NUMBER	PART DESCRIPTION	NOTES
1	819607P	TERMINAL SYF-01T PKT 10	26/20 AWG
	819608P	TERMINAL SYF-41T PKT 10	20/16 AWG
2	819609P	PIN/TERM SYM-01T PKT 10	26/20 AWG
	819610P	PIN/TERM SYM-41T PKT 10	20/16 AWG
3	819615	JST SOCKET 2PIN YLR-02V	
	819616	JST SOCKET 3PIN YLR-03V	
	819617	JST SOCKET 4PIN YLR-04V	
	819618	JST SOCKET 6PIN YLR-06VF	
	819619	JST SOCKET 8 PIN YLR-08V	
4	819611	JST PLUG 2PIN YLP-02V	
	819612	JST PLUG 4PIN YLP-04V	
	819613	JST PLUG 6PIN YLP-06V	
	819614	JST PLUG 8PIN YLP-08V	
5	819620	RETAINER 2 WAY YLS-02V	
	819621	RETAINER 3 WAY YLS-03V	

SINGLE INSTALLATION COMPONENTS

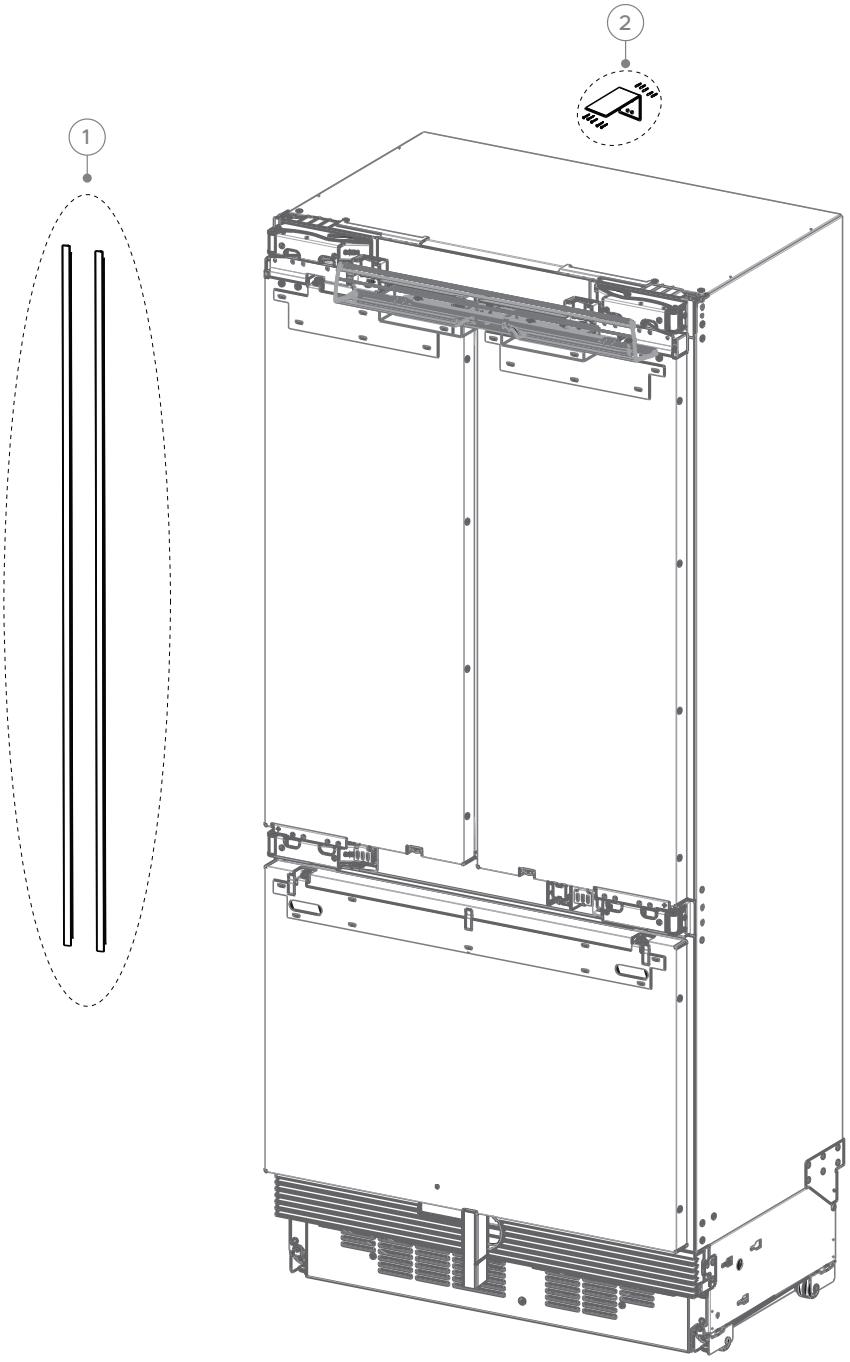

DWG 007520

SINGLE INSTALLATION COMPONENTS

PART	PART NUMBER	PART DESCRIPTION
1	868352	KIT ALCOVE TRIM
	INCLUDES	ASSY ALCOVE TRIM COLUMNS
2	843934	BRACKET ANTI TIP ASSY
	INCLUDES	ANTI TIP BRACKET
	INCLUDES	SCREW 10-12 X 35 WAFER PH ZN
	INCLUDES	PLUG MASONRY SP630#10X30MM
NI	867906	KIT INSTALLATION RS V2
	INCLUDES	BLOCKER AIR BYPASS KICKSTRIP
	INCLUDES	BRACKET ANTI TIP ASSY
	INCLUDES	KIT INSTALL FASTENERS
	INCLUDES	CAP FLOW DIVIDER
	INCLUDES	KIT BOLT LIMITING HINGE K05
	INCLUDES	KIT TOEKICK MAGNET
	INCLUDES 867900	KIT BRACKET PANEL ATTACH V2
NI	867900	KIT BRACKET PANEL ATTACH V2
	INCLUDES	SCREW 8GX16 MUSH WASHER HD
	INCLUDES	BRACKET TRIM SIDE DOOR 60CM
	INCLUDES	SPACER BRACKET SIDE DR 60CM
	INCLUDES	SLIDER BRACKET SKIN DR 60CM
NI	840371P	SCREW 8GX16 MUSH WASH (PKT10)
NI	843662	BOLT LIMITING HINGE K05
NI	848192	KIT INSTALL FASTENERS
NI	848183P	KIT HINGE CHANGE RH TO LH
	INCLUDES	NUT M5 HEX MS ZP
	INCLUDES	BRACKET HINGE LOWER LEFT
	INCLUDES	POCKET HINGE TOP LH
	INCLUDES	BRACKET ADAPT COL K05 LH PC
	INCLUDES	BRACKET ADAPT K05 BTM LH PC
	INCLUDES	BRACKET ALCOVE TOP LH PC

STABILITY COMPONENT

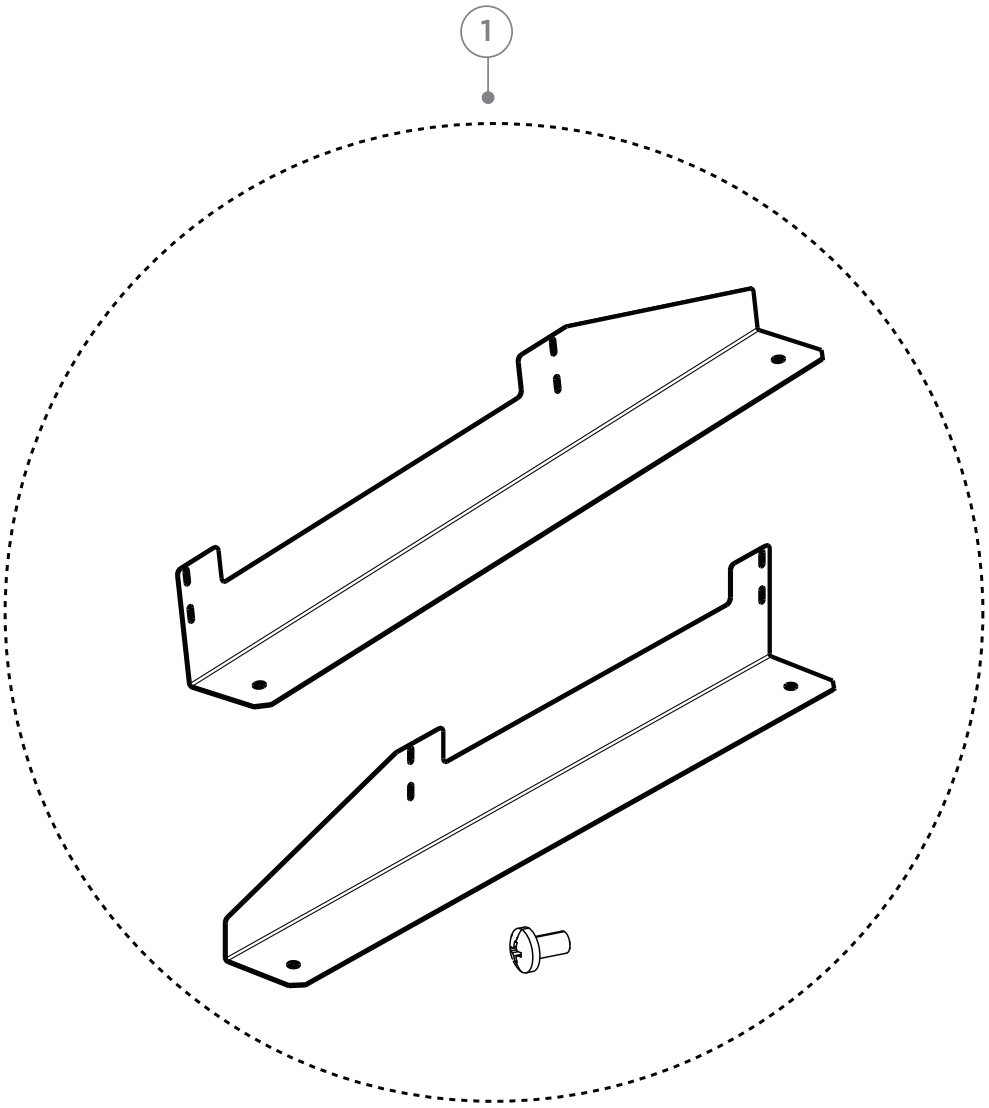

DWG 005174

STABILITY COMPONENT

PART	PART NUMBER	PART DESCRIPTION
1	847164P	KIT BRACE ANTI TIP
	INCLUDES	BRACE ANTI TIP RH
	INCLUDES	BRACE ANTI TIP LH
	INCLUDES	SCREW AB #8X13 HEX PH X 10

FISHERPAYKEL.COM

© Fisher & Paykel Appliances 2026. All rights reserved.

The models shown in this guide may not be available in all markets and are subject to change at any time.

The product specifications in this guide apply to the specific products and models described at the date of issue. Under our policy of continuous product improvement, these specifications may change at any time.

For current details about model and specification availability in your country, please go to our website or contact your local Fisher & Paykel dealer.

27039-A 10.26